BEST QUALITY
BEST QUALITY
BEST
SELLER

Elise

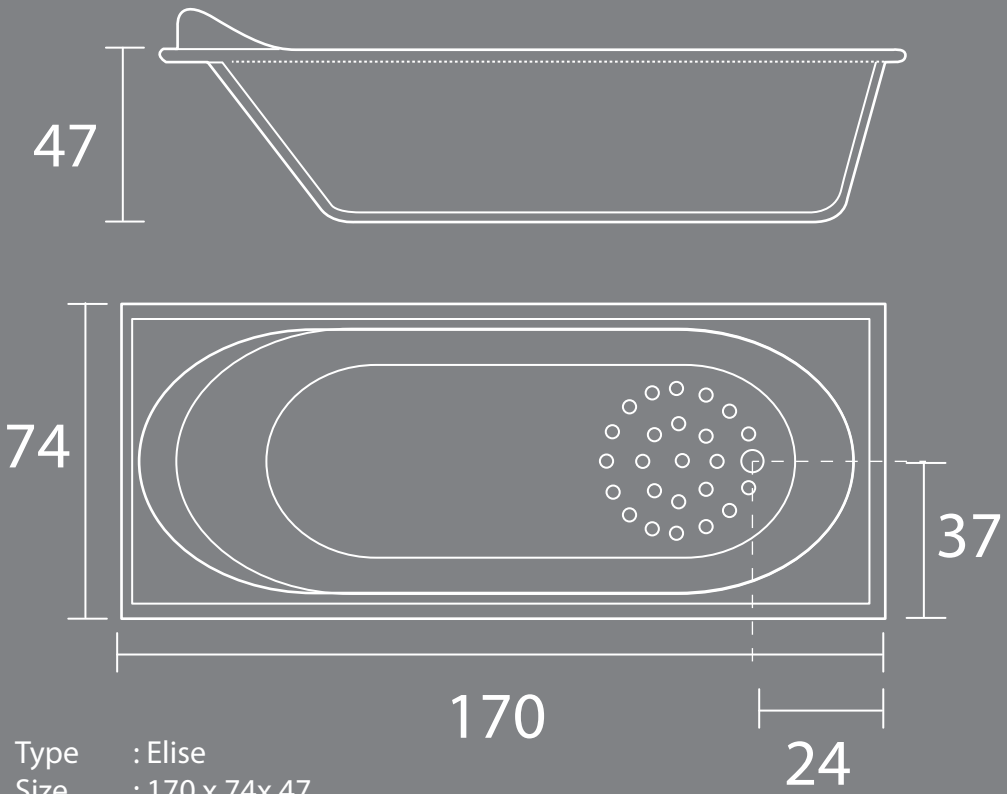

Type : Elise
Size : 170 x 74x 47
Material : Acrylic/Marble/Onyx